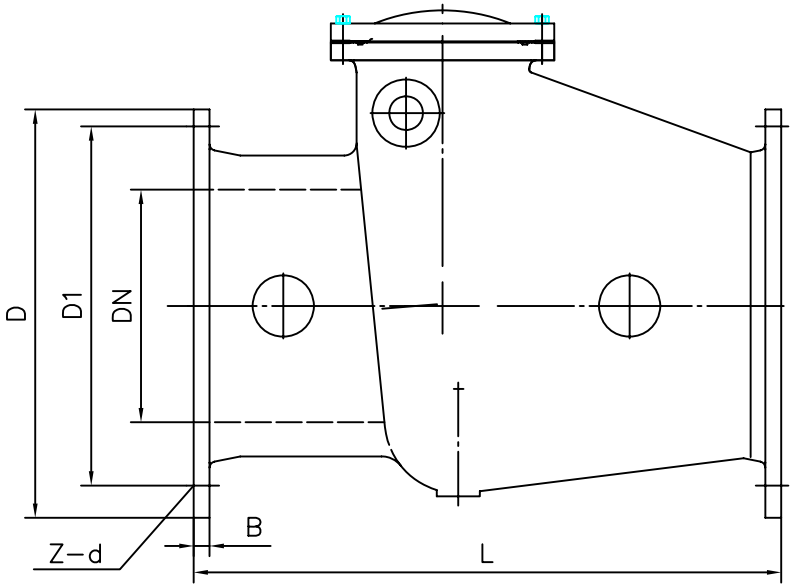


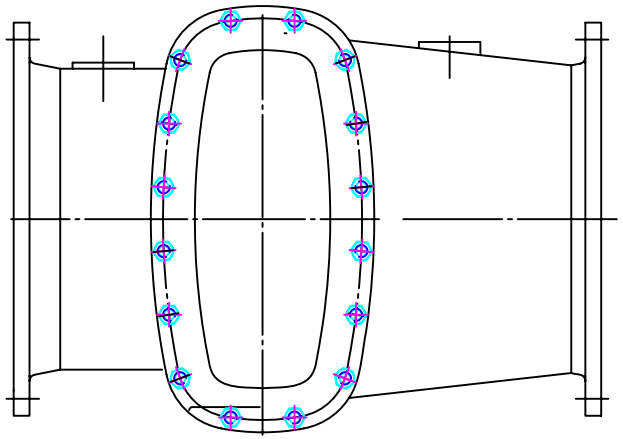

| DN | L | D | D1 | B | Z–d |
|---|---|---|---|---|---|
| 600 | 1219 | 825 | 756 | 35 | 16–29 |
| 500 | 1067 | 705 | 641 | 31.7 | 16–25 |
| 450 | 965 | 641 | 584 | 32 | 12–25 |
| 400 | 914 | 578 | 520 | 28.6 | 12–22 |
| 350 | 787 | 527 | 470 | 28.6 | 12–22 |

BS4090
SWING CHECK VALVE
BS10 TABLE D(E)

MVS491

MECHTECH VALVE SERVICES