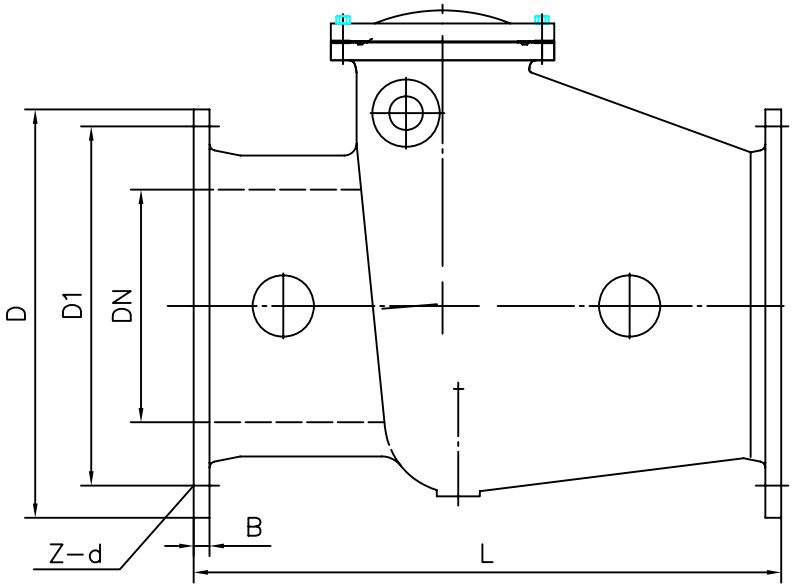

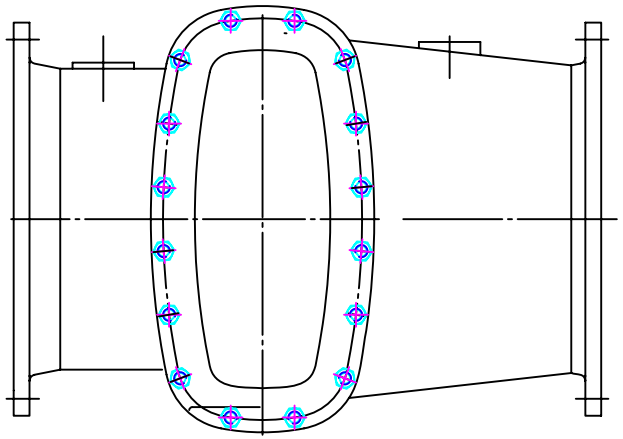

DN	L	D	D1	B	Z–d
600	1219	825	756	35	16–29
500	1067	705	641	31.7	16–25
450	965	641	584	32	12–25
400	914	578	520	28.6	12–22
350	787	527	470	28.6	12–22

BS4090
SWING CHECK VALVE
BS10 TABLE D(E)

MVS491

MECHTECH VALVE SERVICES