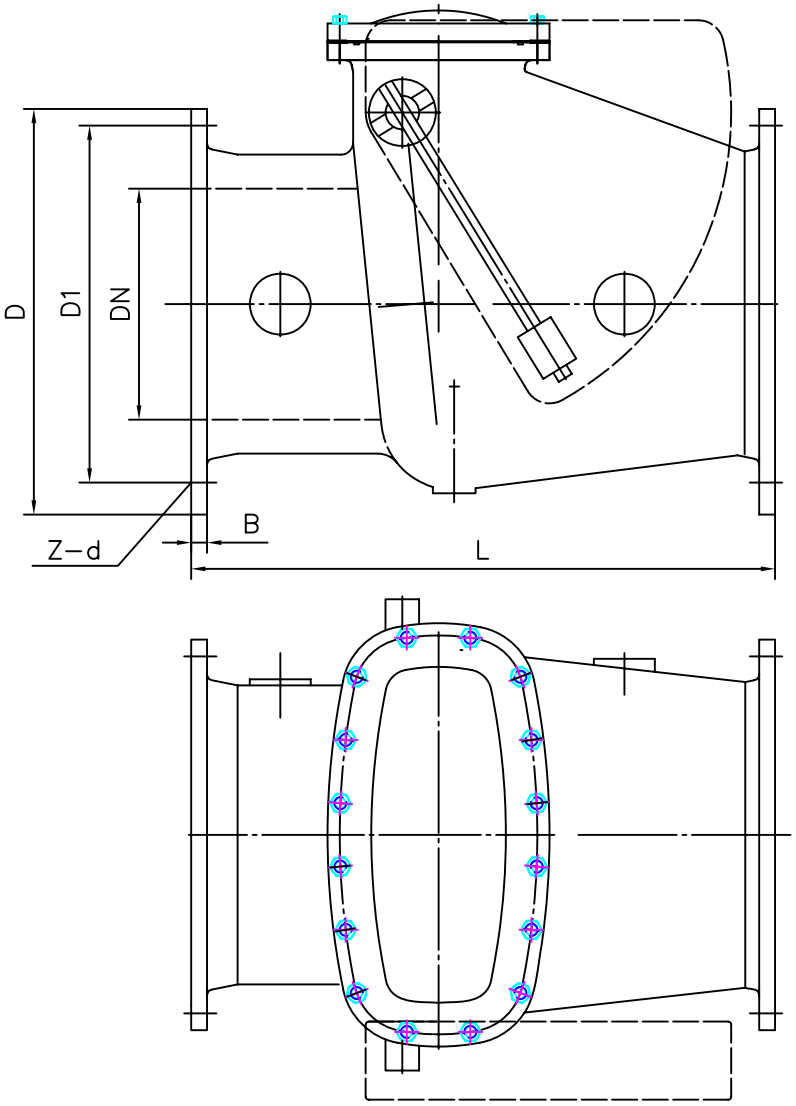

600	1219	840	770	36	20–36
500	1067	715	650	31.5	20–33
450	965	640	585	30	20–30
400	914	580	525	28	16–30
350	787	520	470	26.5	16–26
DN	L	D	D1	B	Z–d

BS5153 PN16
SWING CHECK VALVE
WITH L.WEIGHT

MVS 492 L.W

MECHTECH VALVE SERVICES