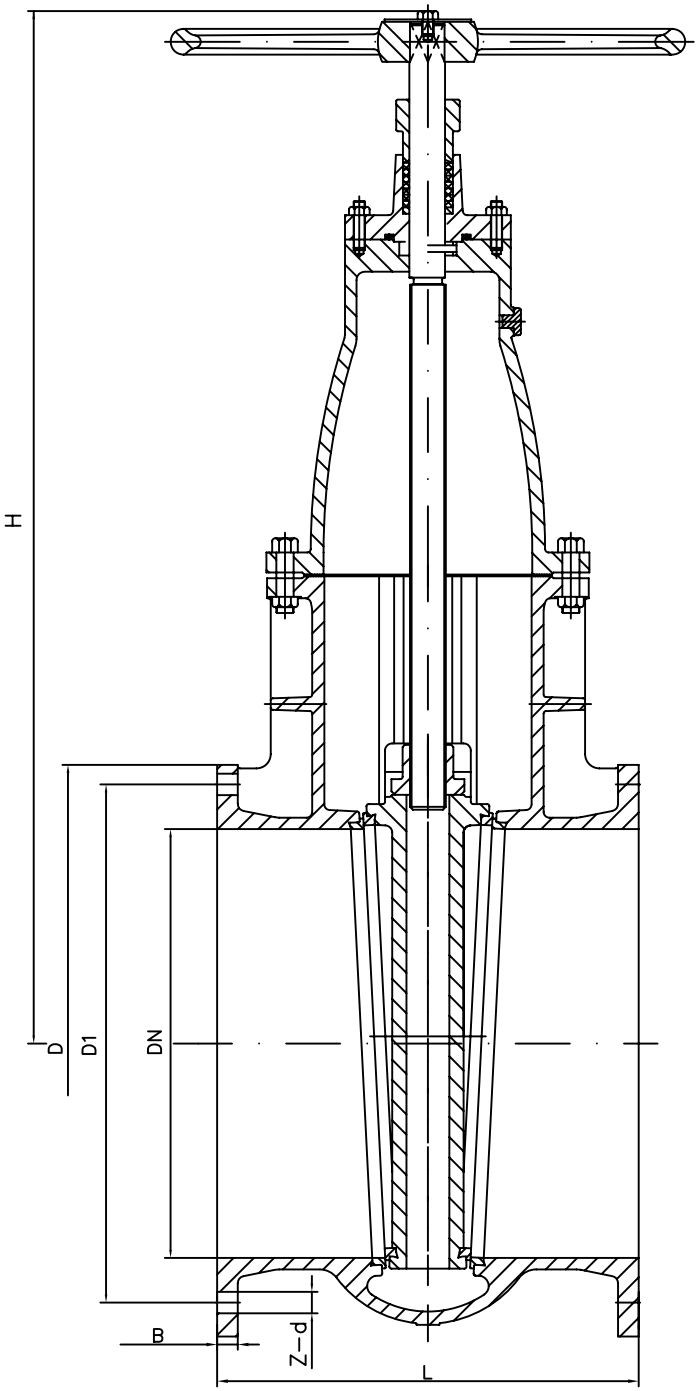

450	495	641	584	32	12-25	1320
400	470	578	520	28.6	12-22	1200
350	445	527	470	28.6	12-22	1125
DN	L	D	D1	B	Z-d	H

BS3464 GATE VALVE
NON RISING STEM
BS 10 TABLE D(E)

MVS541

MECHTECH VALVE SERVICES