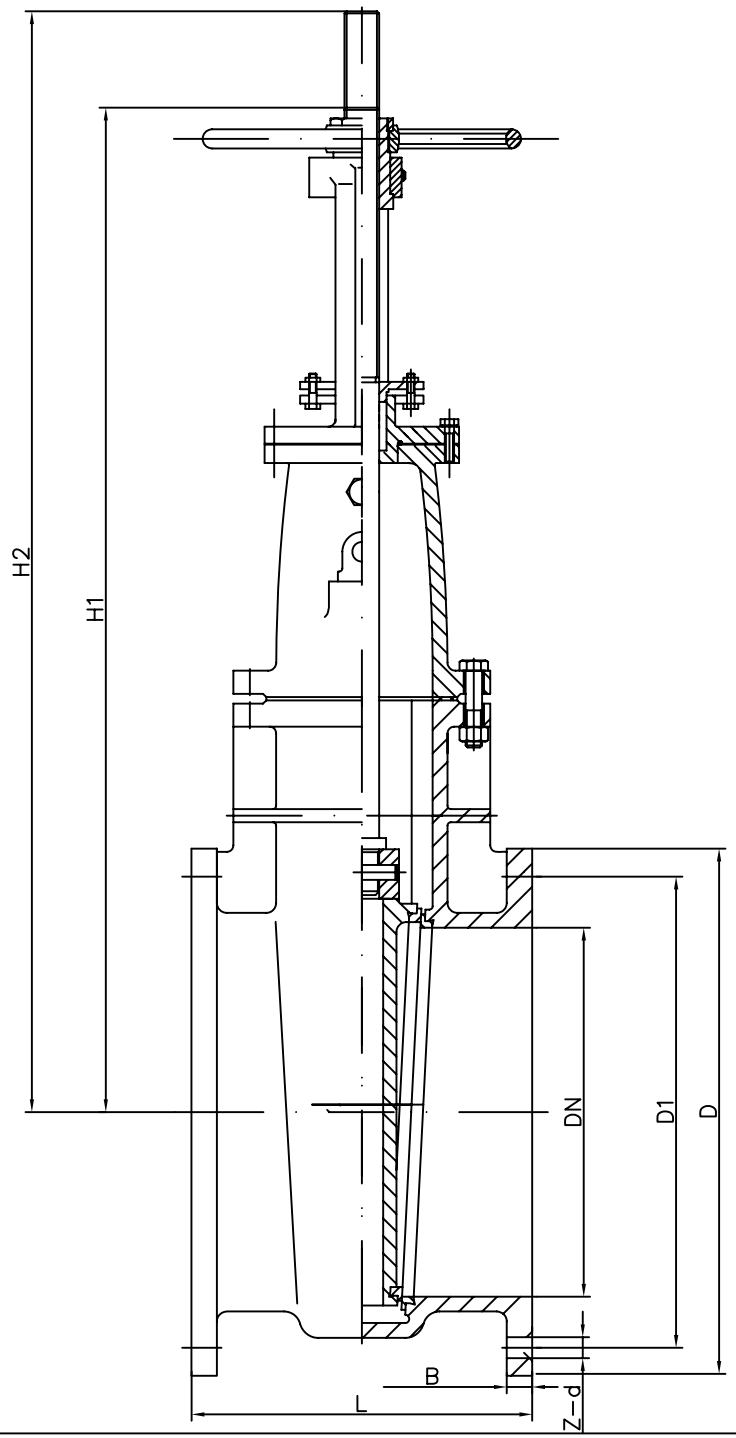

450	495	641	584	32	12-25	1500	1975
400	470	578	520	28.6	12-22	1350	1765
350	445	527	470	28.6	12-22	1180	1545
DN	L	D	D1	B	Z-d	H1	H2

BS3464 GATE VALVE
RISING STEM
BS 10 TABLE D/E

MVS544

MECHTECH VALVE SERVICES