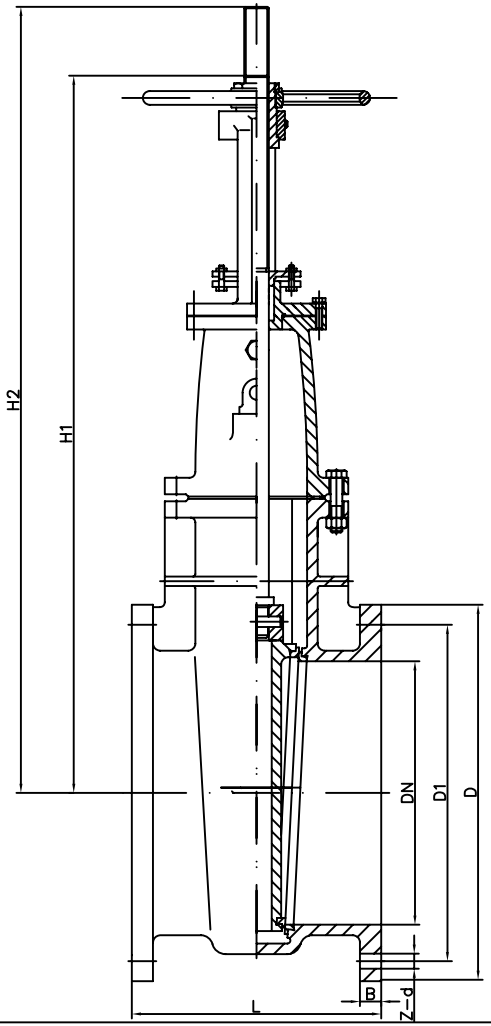


| DN | L | D | D1 | B | Z-d | H1 | H2 |
|---|---|---|---|---|---|---|---|
| 300 | 305 | 457 | 406 | 25 | 12-22 | 1060 | 1440 |
| 250 | 273 | 406 | 356 | 25 | 8-22 | 920 | 1270 |
| 200 | 241 | 337 | 292 | 22 | 8-19 | 790 | 1050 |
| 150 | 210 | 279 | 235 | 21 | 8-19 | 610 | 800 |
| 125 | 190 | 254 | 210 | 21 | 8-19 | 540 | 700 |
| 100 | 172 | 216 | 178 | 19 | 4-19 | 440 | 570 |
| 80 | 165 | 184 | 146 | 19 | 4-19 | 380 | 475 |
| 65 | 159 | 165 | 127 | 17 | 4-19 | 350 | 425 |
| 50 | 146 | 152 | 114 | 17 | 4-19 | 290 | 360 |

BS3464 short pattern
outside screw
rising stem

MVS 172

MVS(EXPORT) LTD